EC Motor

Application

The EVO/ECM-MSpd allows switches, ~24V thermostats and ~24V controls to select one of four adjustable flow indexes[1] for an EC Motor.

A single isolated diode-multiplexed input[2] allows up to four speed calls. The speed for a call can be adjusted when the call is selected. The adjustment range is from Off to 100% of the motor's programmed control range.

When changing speeds, the EVO/™ECM-MSpd changes the flow index at a gradual 1% per second rate. This ramping feature reduces occupant awareness of changes in diffuser airflow.

Features

- Isolated Switch Input Protection
- Up to 4 Speed Calls over 2 wires
- PWM or 0-+10V Output
- Gradual or Fast Speed Change
- Pilot Pulse Enable/Disable

Ordering

EVO/ECM-MSpd	Circuit Board Version
EVO/ECM-MSpd-MP	Add Mounting Plate

Accessories

EVO/ECM-CBL-??	Control cable. ?? = length in ft.
EVO/ECM-PBL-??	Power Cable. ?? = Length in ft.
EVO/ECM-TAPS	Easy interface with multi-position switches and ~24V thermostats for up to four speed selections.

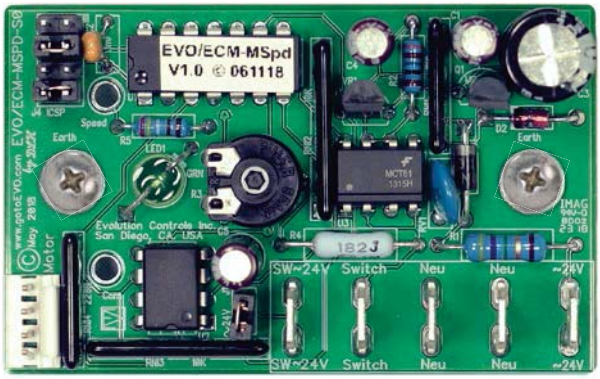

EVO/™ECM-MSpd

Specifications

Power	~24V ±20% 50/60 Hz NEC Class2 USA +24V NEC Class II USA 2 W, 4 VA + 1VA/Moto
Switch	1k8 Ω load
Speed Selection (See Wiring)	*Multi-Speed* ~24V ± 20% 50/60 Hz *Two Speed Only* +24V ± 20%
Outputs	
Go	+15V @ 10 mA
Motor Control	
no jumper	PWM[3] +15V @ 10 mA
with jumper (See Options)	0 to +10 V DC @ 10 mA

PWM Supports Pilot Pulse (Autoswitch) Function

Therm. Stability <0.01%/ºF

Operating Environment	0ºF to 130 ºF (-18ºC to 55ºC) 10-80% rh
Connections	¼" Tabs

[1] Flow index = %PWM except at the end points

[2] EVO/ECM-TAPS or equivalent circuit output

[3] PWM = Vspd

Adjustment

1. With the switch connected to the Switch tab, switch to the call to be adjusted.

2. Turn the Adjust shaft until the flashing LED turns solid green when it enters the adjustment mode.

3. In the adjustment mode, continue to turn the Adjust shaft to the desired speed by measuring the %speed voltage between Com and the Speed Test Point.

   0-+1V = 0 to 100% PWM

   Note: Ramping is temporarily disabled in the adjustment mode.

4. Stop adjusting when the desired speed is reached. The speed setting will be saved after six seconds when it exits the adjustment mode. The LED returns to flashing.

5. Switch to the next call and repeat the above steps to adjust the speed.

Speed Test Point (red probe)

Common (black probe)

Green LED

The green LED continuously indicates the speed. After a pause, the lamp flashes out the tens digit, then the units digit of a number between 0 and 100. Long flashes represent the tens digit, and short flashes represent the units digit. For example, a speed of 23% flashes two longs, then three shorts. A steady heartbeat of flashes indicates a flow index of 0%. An extra-long flash and ten short flashes indicates a speed of 100%. The lamp flashes the speed that was present when the flash sequence started.

The lamp stops flashing and stays lit when in adjustment mode.

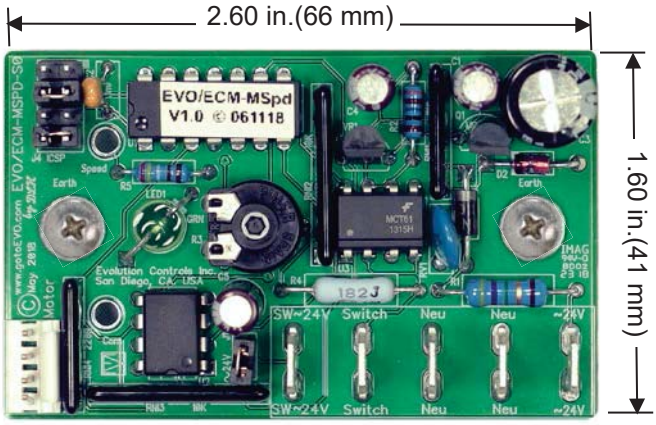

Mounting

Mount the control inside a metal control cabinet or enclosure. Fasten the control mounting posts to an earthed metal surface. Use #8 flat or oval head screws through the two metallic mounting posts. The countersink taper forces a good earth connection between the mounting post and the PC board.
Mounting posts are 3/32”/2.38mm ID.
Adjustment shafts are 0.20”/5mm dia.

Mount the control with clearance for the ~24V power wires and control cable connector. Mount the control so the green LED is visible. Make sure there is access to the test points and the Adjust shaft.

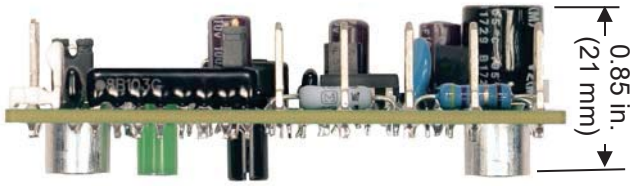

Options

Power Supply — Insert jumper when the controller and the call signals share the same power supply. Remove jumper when controller and call signals are powered by different transformers (see Wiring).

Jumper Block J4

Pilot Pulse — Insert jumper so the PWM never goes below 0.4% or above 99.6%. Some profiles allow the motor to run in an alternate mode when there is no pulse on the PWM input.

Output Type — Insert jumper for 0 – +10V motor control. Remove jumper for PWM motor control

Ramp Disable — Insert jumper to disable the 1% PWM/second ramp rate (no delay).

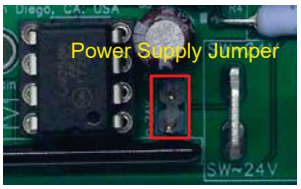

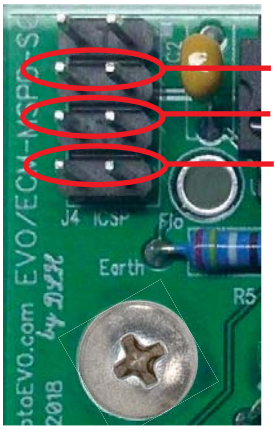

Wiring

Power the EVO/ECM-MSpd controller with a ~24V NEC UL 1310 Class 2 USA power source. DC voltages from +20V to +30V may also be used to power the control[4]. Observe all code requirements and follow all safety practices regarding low voltage power supplies and circuits to insure a safe, reliable installation.

Earth one side of the power source. Connect the neutral connection to the earthed side of the ~24V Class 2 power source.

Some applications may require an isolated power supply or alternative earthing scheme. Follow code requirements and observe all safety practices concerning unearthed low voltage circuits.

Connect the ~24V connection to the hot side of the ~24 Class 2 power source. You may interrupt this connection to turn off the controller and stop the EC Motor. This is especially useful if you plan to set a flow when the switch is off (no signal at the Switch tab). Many automation controllers will power the ECM-MSpd controller directly from an on/off output.

The Switch tab is optically isolated from other EVO/ECM-MSpd circuitry. To use the same power as the control, install the ~24V jumper to internally connect SW~24V to the internal ~24V power.

Dual Speed:

For simple two speed operation, Install the ~24V jumper and connect a switch between SW~24V and Neu.

Same ~ 24V Supply (insert Jumper ▩)

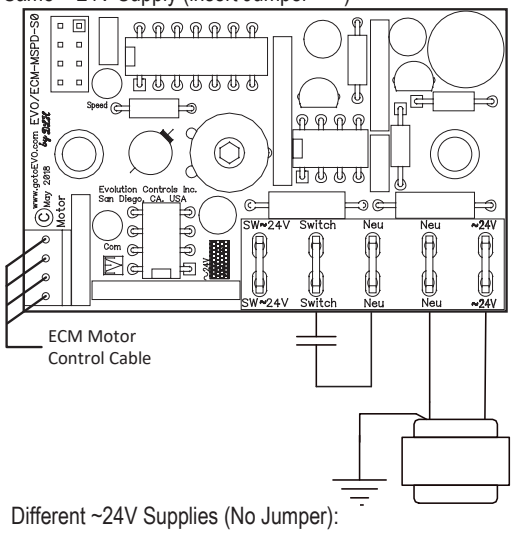

Different ~24V Supplies (No Jumper):

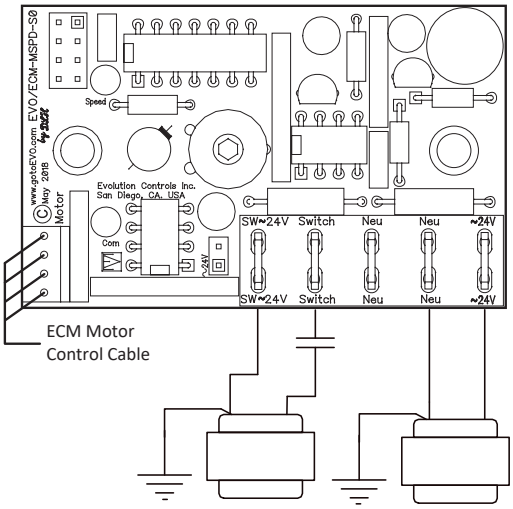

[4] If DC voltage is used to power the control and the switch, it can only be used for dual speed control. For multiple speeds, a second ~24VAC transformer must be used to power the switch.

Multi Speed:

Same ~ 24V Supply (insert Jumper ▩)

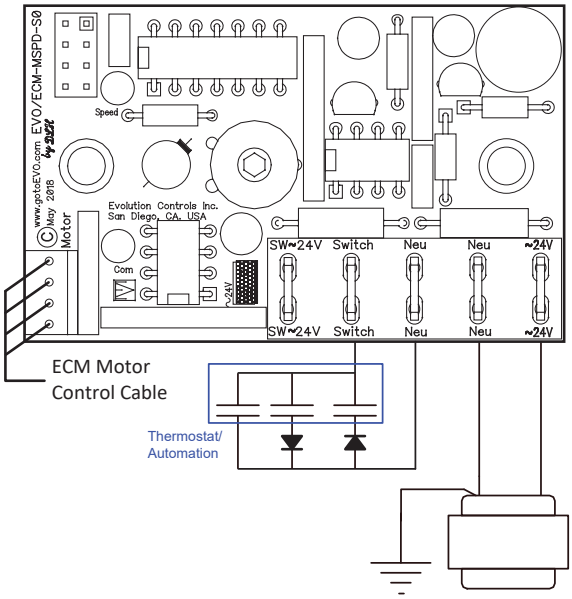

Different ~24V Supplies

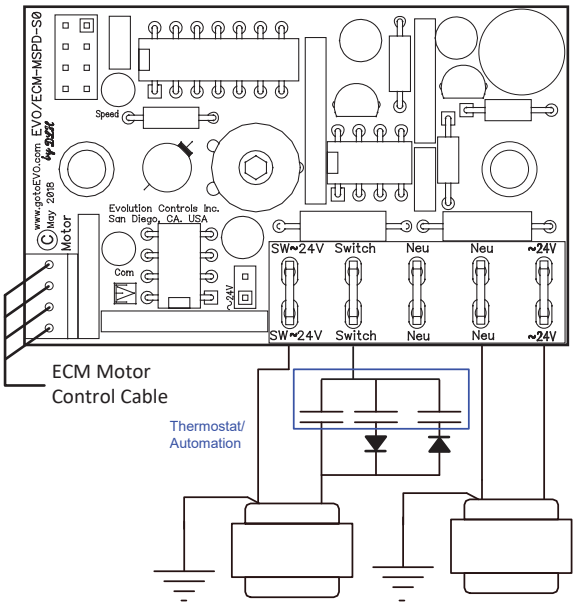

EVO/ECM-TAPS:

Same ~ 24V Supply (insert Jumper ▩)

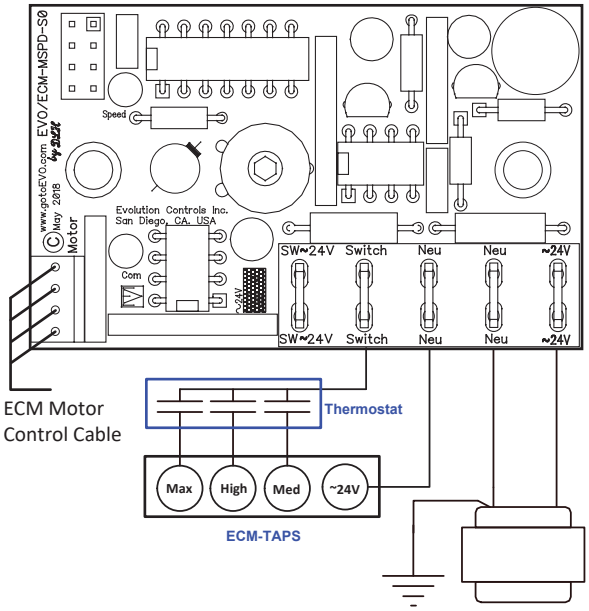

Different ~24V Supplies

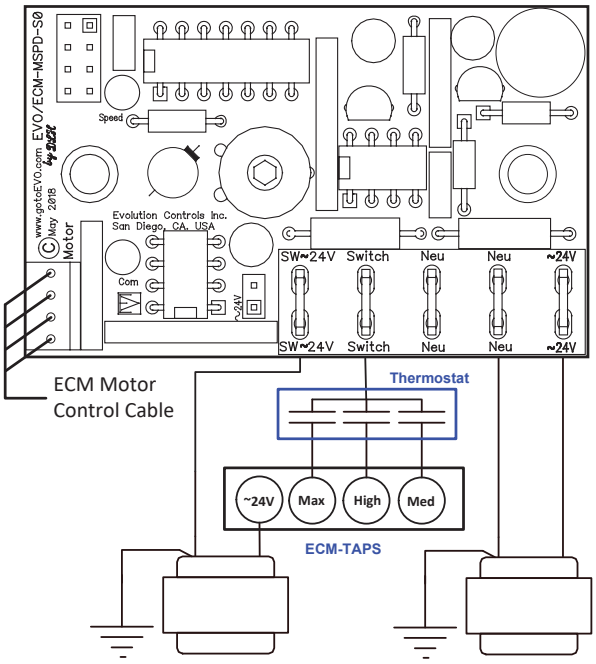

With the mounting plate ”MP” option, the MSpd mounts to a standard single gang electrical box or equivalent cutout in a machine’s sheet metal.

Place a decorative plate or protective cover over the MSpd where required. Use self-threading screws, or a hand tap to thread the 2 holes that fasten the cover to the MSpd plate.

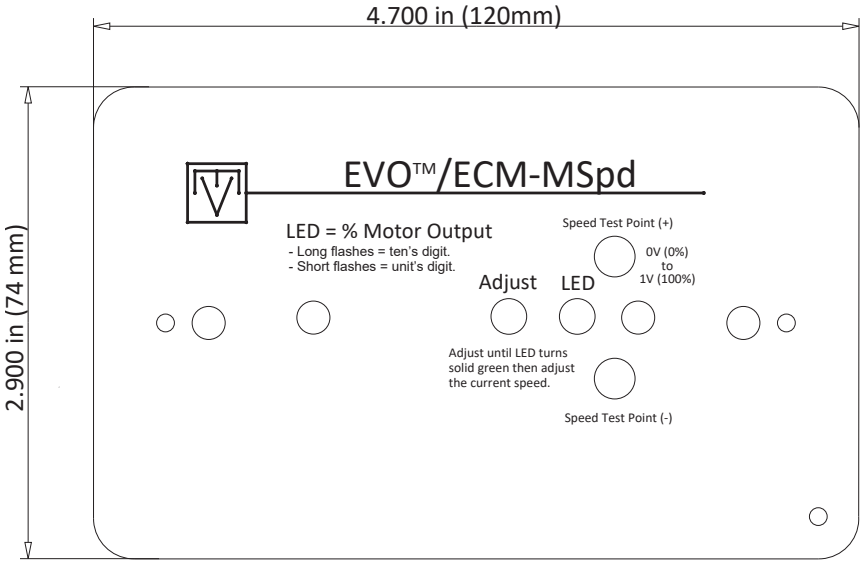

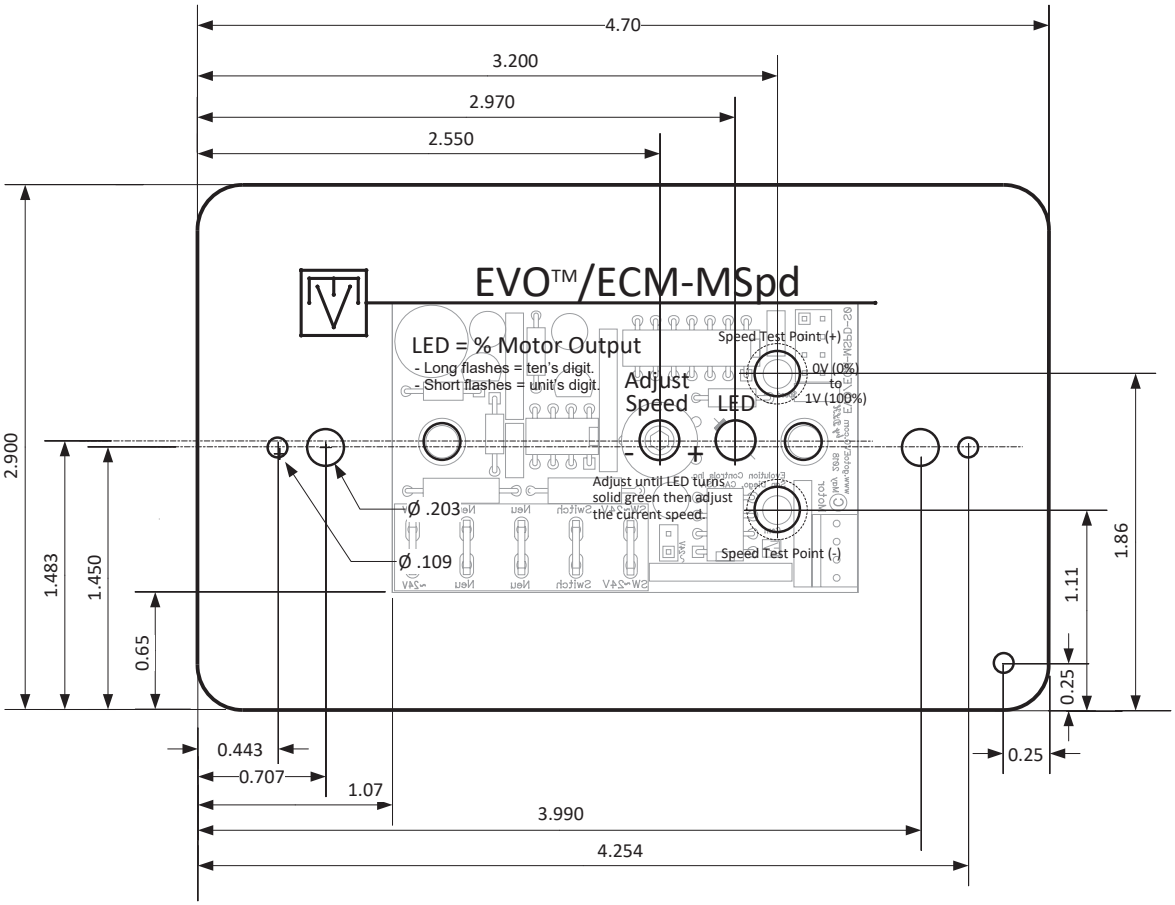

All dimensions in inches